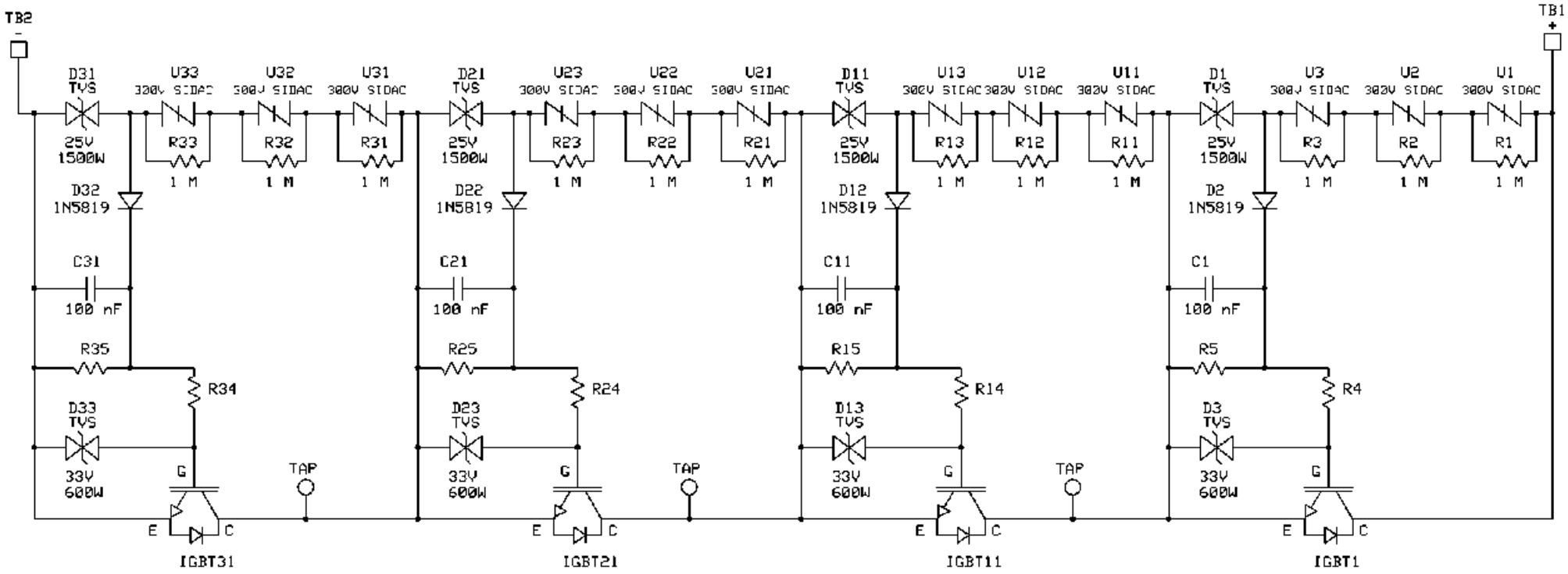

Circuit Designed by Terry W. Fritz
PCB by Mark R. Dunn

SISG4 PC Board		
Schematic		
Drawn by: MRD	Rev 0 11/7/06	SISG4 Rev 0